HEAVY DUTY
COMERCIAL STEEL SHELVING

SKU 101933 72″ X 48″ X 24″

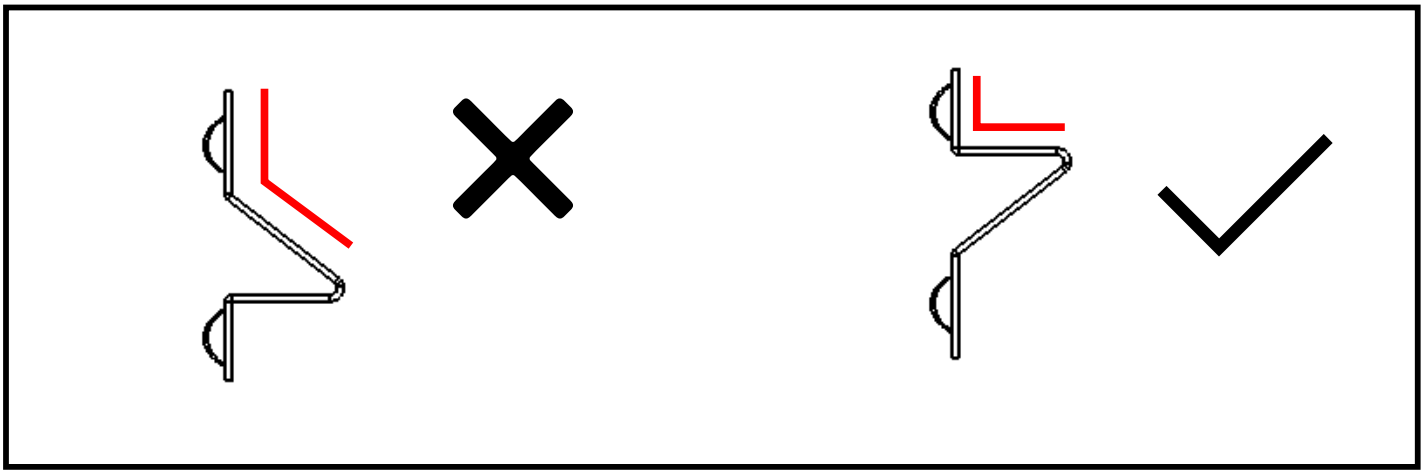

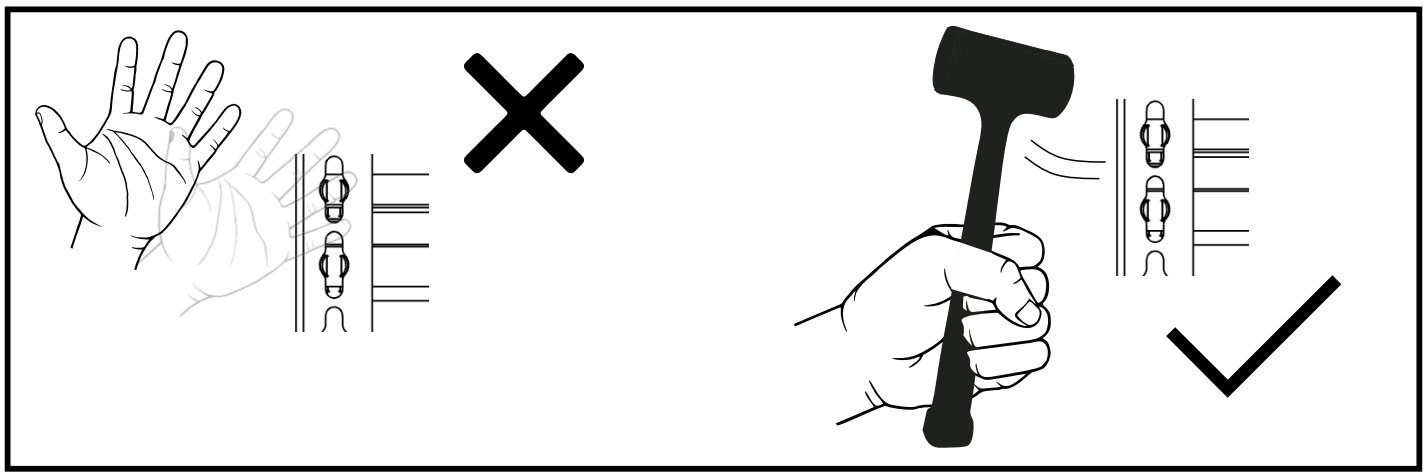

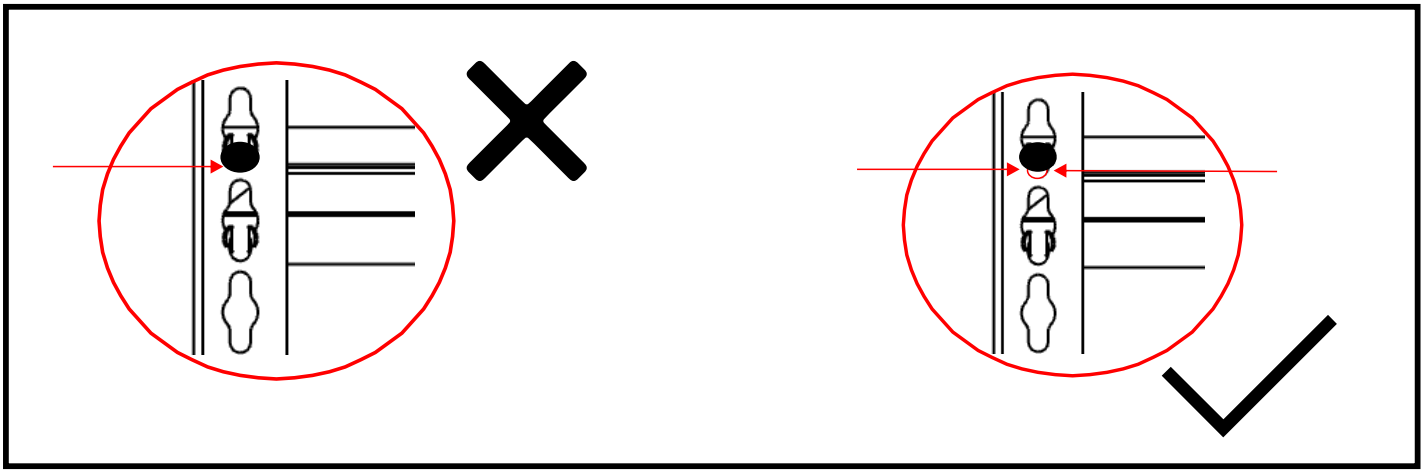

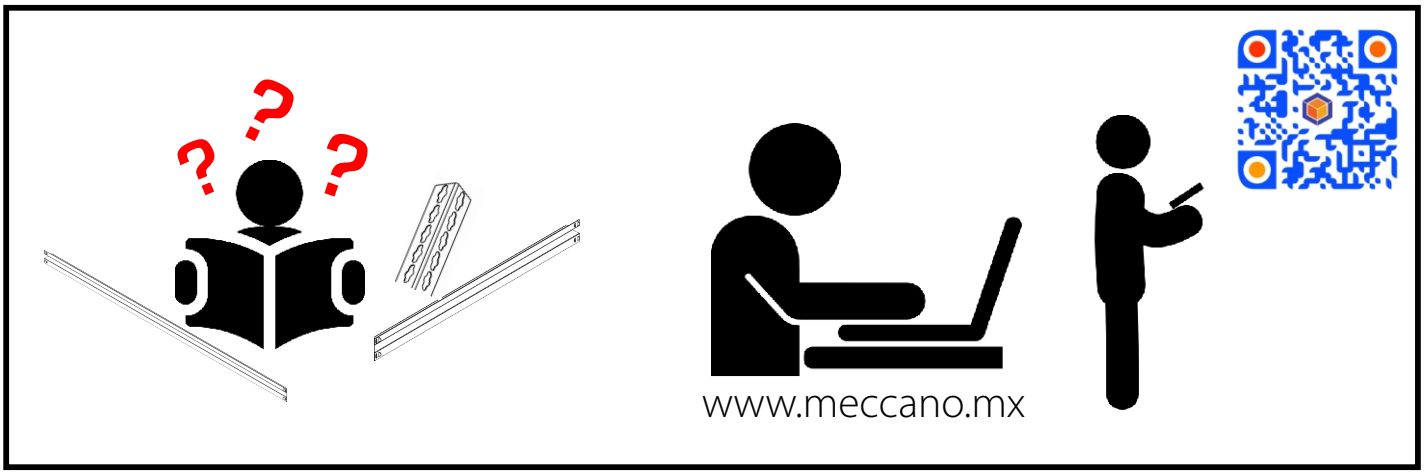
www.meccano.mx

HEAVY DUTY
COMERCIAL STEEL SHELVING

SKU: 101933

N°	QUANTITY	DIMENSIONS	MATERIAL
A	**8**	**36 x 1.25 x 1.25 IN**	**STEEL**
B	**10**	**3.3 x 47.3 IN**	**STEEL**
C	**10**	**3.3 x 23.4 IN**	**STEEL**
D	**5**	**23.8 x 47.8 IN**	**MDF**

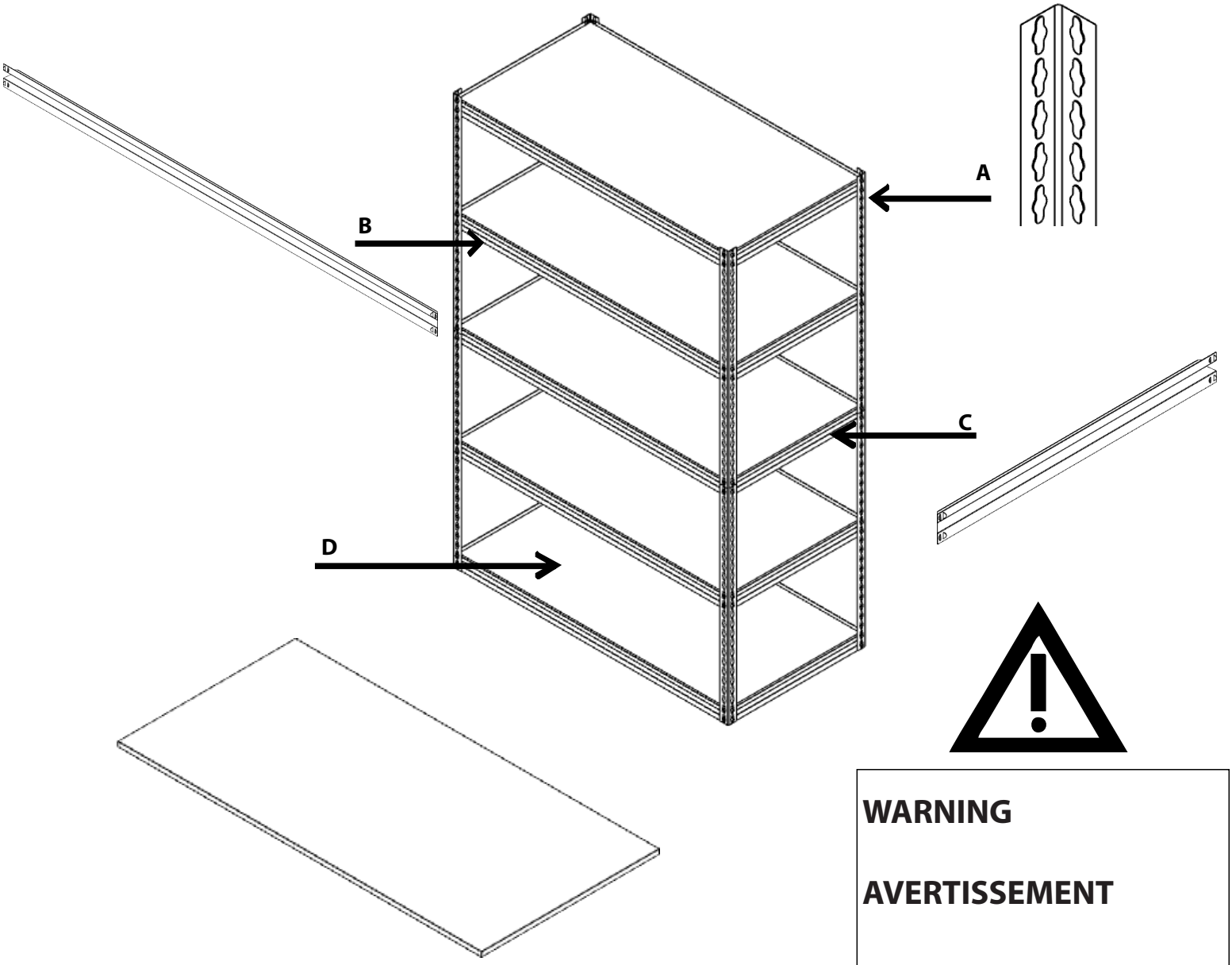

WARNING

AVERTISSEMENT

ADVERTENCIA

1

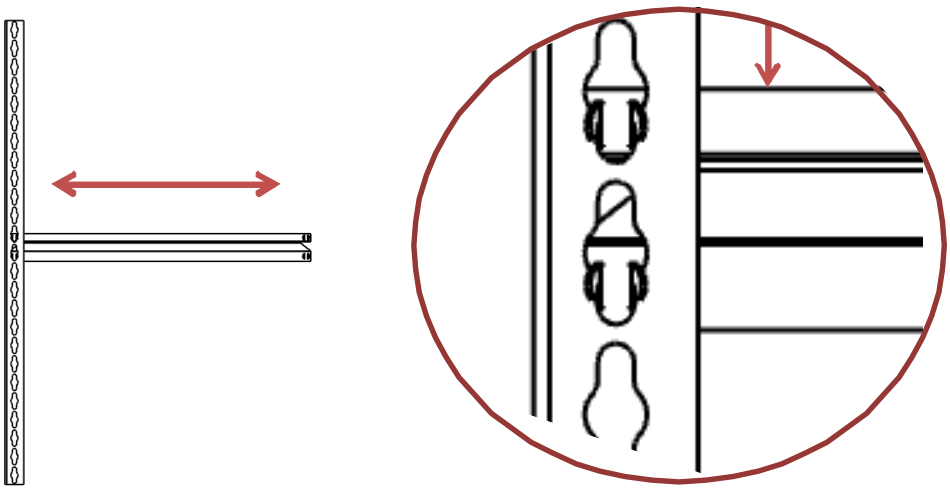

2

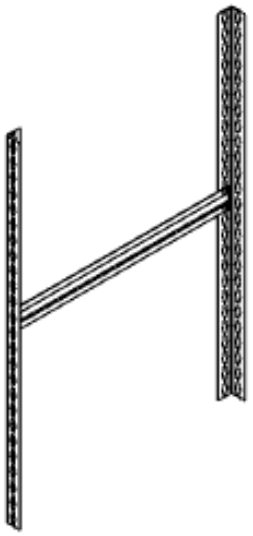

3

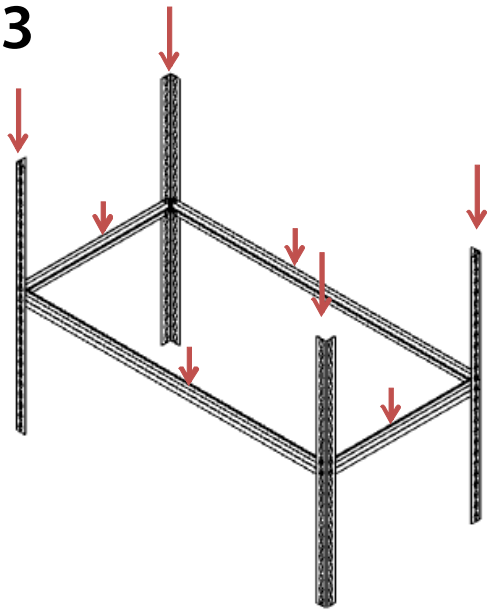

4

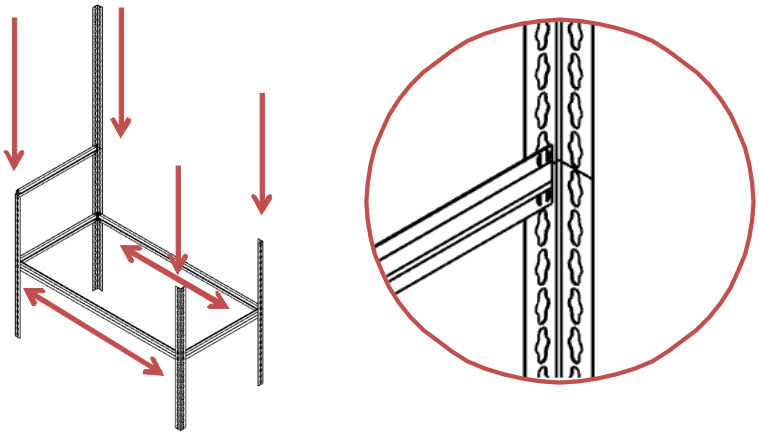

5

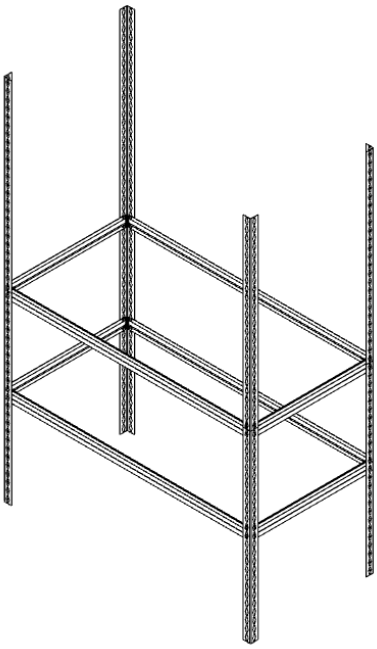

6

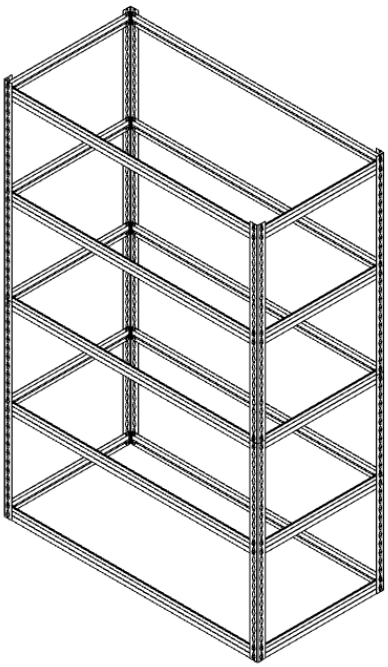
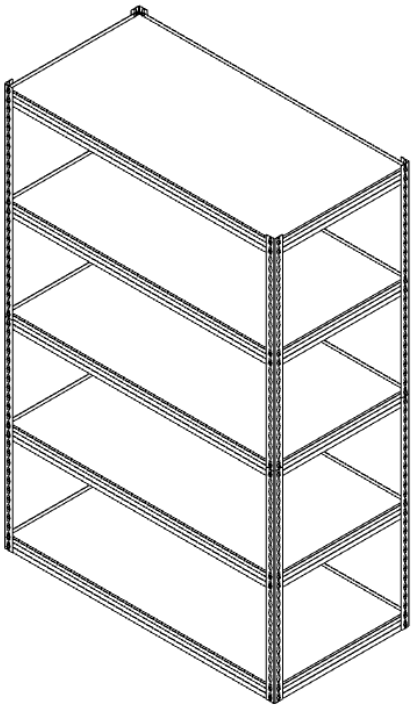
7